ECART DESIGN

KRAFT WALL LAMP
(c. 1992)

Lacquered steel, kraft paper & patinated brass.

CM	IN
H. 33	H. 13
L. 15	W. 6
P. 32	D. 12.5

ECART DESIGN

In 1978, at 6 rue Pavée in Paris, Andrée Putman brought her passion for decorative arts to life by founding Ecart International. The company was established with a clear mission: to reissue furniture and objects from historical creators of the early 20th century, many of whom had been largely forgotten. Located in a showroom set up in a former warehouse, Ecart International positioned itself as a pioneer in what it called an «archaeology of modernity.»

From the beginning, Andrée Putman focused on reissuing iconic works by major names in design and decorative arts, whose timeless elegance contrasted with the dominant aesthetics of the 1980s, characterized by the Memphis Group and Starck's minimalism. She chose to revive the creations of Mariano Fortuny, Eileen Gray, Jean-Michel Frank, Robert Mallet-Stevens, Michel Dufet, Pierre Chareau, and Jacques-Henri Lartigue, among other influential figures. Guided by a meticulous eye, aesthetic intuition, and extensive archival research, she carefully selected furniture, lamps, rugs, and objects from period reviews and antique dealers. Each piece was analyzed in detail to understand its mechanisms and functions, allowing it to be revitalized for contemporary society.

A pioneer in reissues, Andrée Putman was soon joined by Colette Bel, who took charge of editorial direction and oversaw the development of reissues at Ecart International. With growing success, Andrée decided to expand her catalog to include contemporary creators like Sacha Ketoff, Olivier Gagnère, Naggar and Lachevsky, Sylvain Dubuisson, and Martin Szekely.

In addition to these editions from contemporary designers, Ecart International developed its own creative studio. This in-house studio allowed the company to design original pieces, enriching its offerings and affirming its vision of timeless modernity.

The company also grew with the creation of an interior design agency, Ecart. Andrée Putman assembled a small team, including Jean-François Bodin, to respond to interior design requests from the fashion world. Bruno Moinard joined during the Thierry Mugler boutique project at Place des Victoires, where he experienced the unique atmosphere of the agency, «where the ghosts of Gaudi, Fortuny, and Eileen Gray linger.»

The name "Ecart," an anagram of "Trace," evokes an aesthetic journey marked by elegance, quality, and restraint.

ECART DESIGN

KRAFT WALL LAMP
(c. 1992)

LAMPSHADE

Kraft paper

METAL

Grey lacquered steel

Golden brass

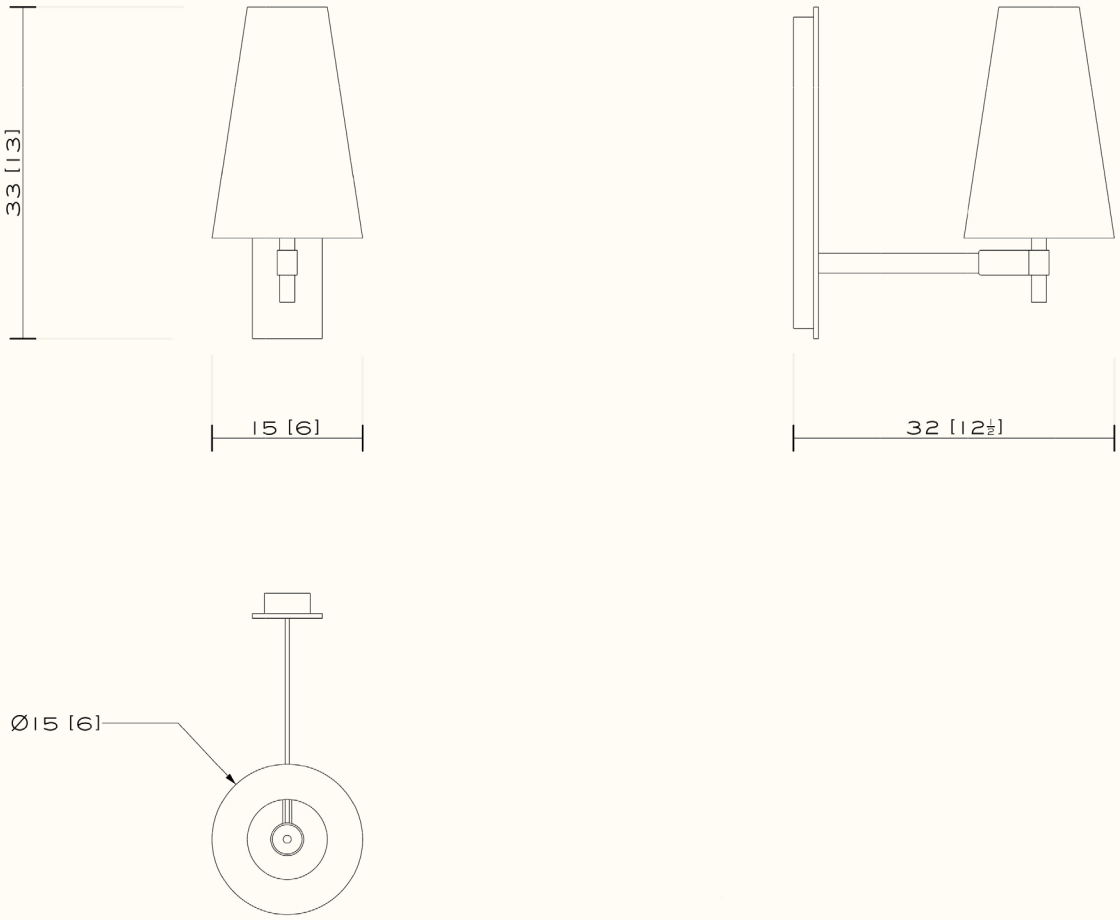

ECART DESIGN

KRAFT WALL LAMP
(c. 1992)

CE	US
E14	E12
230 V	120 V

ECART